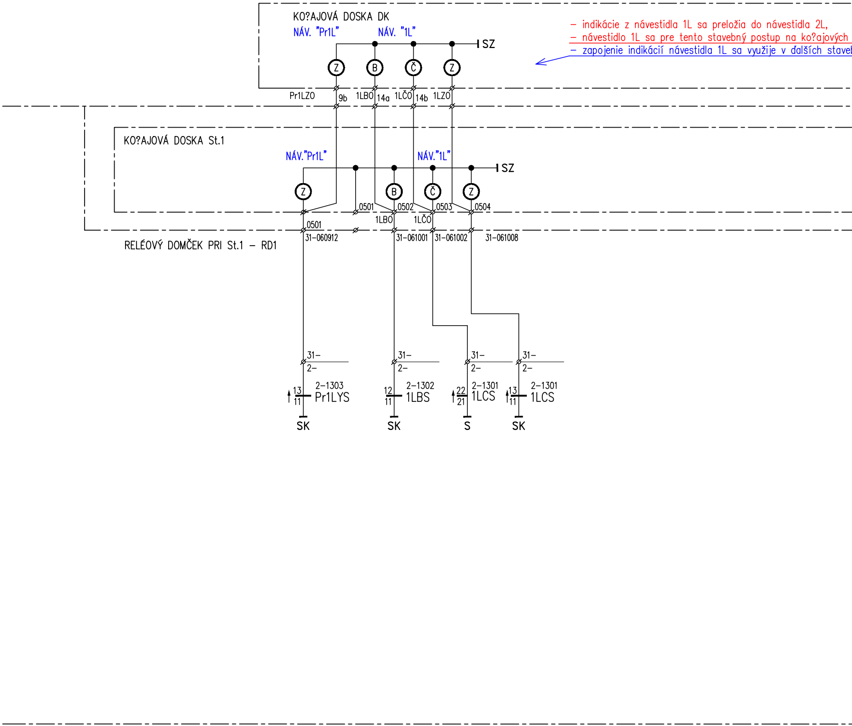
KO?AJOVÁ DOSKA DK
NÁV. "Pr1L"
NÁV. "1L"
SZ
Z
B
Č
Z
Pr1LZO
9b
1LBO
14a
1LČO
14b
1LZO
KO?AJOVÁ DOSKA St.1
NÁV."Pr1L"
NÁV."1L"
SZ
Z
B
Č
Z
0501
0502
0503
0504
1LBO
1LČO
0501
31-060912
31-061001
31-061002
31-061008
RELÉOVÝ DOMČEK PRI St.1 – RD1
31-
2-
2-1303
13
11
Pr1LYS
SK
31-
2-
2-1302
12
11
1LBS
SK
31-
2-
2-1301
22
21
1LCS
S
31-
2-
2-1301
13
11
1LCS
SK

– indikácie z návestidla 1L sa preložia do návestidla 2L,

– návestidlo 1L sa pre tento stavebný postup na ko?ajových

– zapojenie indikácií návestidla 1L sa využije v ďalších staveb

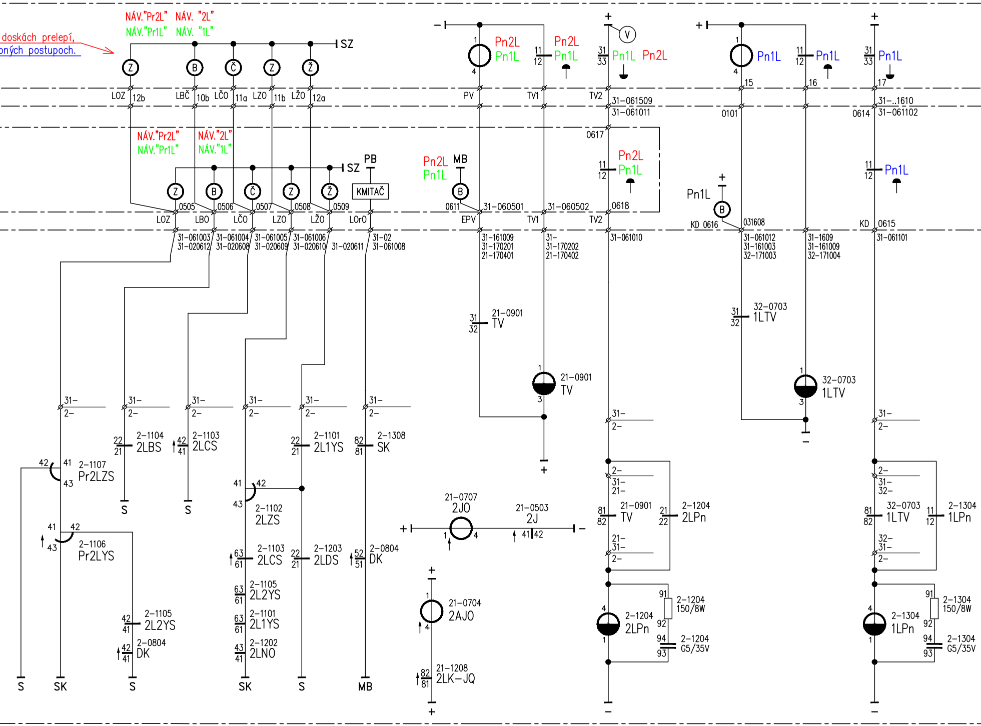
doskách prelepí,
ných postupoch.
NÁV."Pr2L" NÁV. "2L"
NÁV."Pr1L" NÁV. "1L"
SZ
Z B Č Z Ž
LOZ 12b LBČ 10b LČO 11a LZO 11b LŽO 12a
NÁV."Pr2L" NÁV."2L"
NÁV."Pr1L" NÁV."1L"
SZ PB
KMITAČ
0505 0506 0507 0508 0509
LOZ LBO LČO LZO LŽO LOrO
31–061003 31–020612
31–061004 31–020608
31–061005 31–020609
31–061006 31–020610
31–020611
31–02 31–061008
31– 2–
2–1107 Pr2LZS
2–1104 2LBS
2–1103 2LCS
2–1102 2LZS
2–1101 2L1YS
2–1308 SK
2–1106 Pr2LYS
2–1103 2LCS
2–1203 2LDS
2–0804 DK
2–1105 2L2YS
2–1101 2L1YS
2–1202 2LNO
2–1105 2L2YS
2–0804 DK
S SK S S S SK S MB
Pn2L Pn1L
PV TV1 TV2
31–061509 31–061011
0617
Pn2L Pn1L
Pn2L MB
Pn1L
B
0611 31–060501 31–060502 0618
EPV TV1 TV2
31–161009 31–170201 21–170401
31– 31–170202 21–170402
31–061010
21–0901 TV
21–0901 TV
V
21–0707 2JO
21–0503 2J
21–0704 2AJO
21–1208 2LK–JQ
21–0901 TV
2–1204 2LPn
2–1204 150/8W
2–1204 G5/35V
Pn1L
15 16 17
0101 0614
31–..1610 31–061102
Pn1L
KD 0616 031608 KD 0615
31–061012 31–161003 32–171003
31–1609 31–161009 32–171004
31–061101
32–0703 1LTV
32–0703 1LTV
32–0703 1LTV
2–1304 1LPn
2–1304 150/8W
2–1304 G5/35V

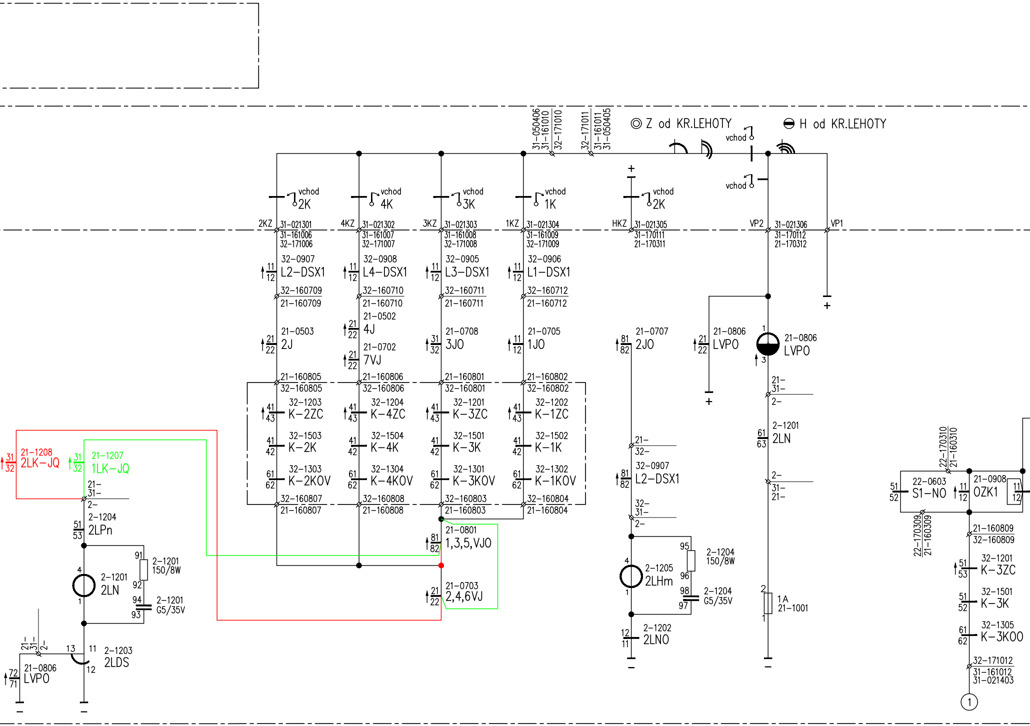
31–050406
31–161010
32–171010
32–171011
31–161011
31–050405
◎ Z od KR.LEHOTY
⊖ H od KR.LEHOTY
vchod
vchod
vchod
2K
vchod
4K
vchod
3K
vchod
1K
vchod
2K
+
2KZ
31–021301
31–161006
32–171006
4KZ
31–021302
31–161007
32–171007
3KZ
31–021303
31–161008
32–171008
1KZ
31–021304
31–161009
32–171009
HKZ
31–021305
31–170111
21–170311
VP2
31–021306
31–170112
21–170312
VP1
32–0907
L2–DSX1
32–0908
L4–DSX1
32–0905
L3–DSX1
32–0906
L1–DSX1
11
12
32–160709
21–160709
32–160710
21–160710
32–160711
21–160711
32–160712
21–160712
21–0502
4J
21–0503
2J
21–0702
7VJ
21–0708
3JO
21–0705
1JO
21–0707
2JO
21–0806
LVPO
21–0806
LVPO
21
22
31
32
81
82
1
3
+
+
21–160805
32–160805
21–160806
32–160806
21–160801
32–160801
21–160802
32–160802
32–1203
K–2ZC
32–1204
K–4ZC
32–1201
K–3ZC
32–1202
K–1ZC
41
43
32–1503
K–2K
32–1504
K–4K
32–1501
K–3K
32–1502
K–1K
41
42
32–1303
K–2KOV
32–1304
K–4KOV
32–1301
K–3KOV
32–1302
K–1KOV
61
62
32–160807
21–160807
32–160808
21–160808
32–160803
21–160803
32–160804
21–160804
21–
31–
2–
2–1201
2LN
61
63
21–
32–
32–0907
L2–DSX1
2–
31–
21–
32–
31–
2–
21–1208
2LK–JQ
21–1207
1LK–JQ
21–
31–
2–
2–1204
2LPn
51
53
21–0801
1,3,5,VJO
21–0703
2,4,6VJ
91
92
2–1201
150/8W
4
1
2–1201
2LN
94
93
2–1201
G5/35V
21–
31–
2–
13
11
12
2–1203
2LDS
21–0806
LVPO
72
71
95
96
2–1204
150/8W
2–1205
2LHm
98
97
2–1204
G5/35V
12
11
2–1202
2LNO
2
1
1A
21–1001
22–170310
21–160310
22–0603
S1–NO
51
52
21–0908
OZK1
11
12
22–170309
21–160309
21–160809
32–160809
32–1201
K–3ZC
51
53
32–1501
K–3K
51
52
32–1305
K–3KOO
61
62
32–171012
31–161012
31–021403
1
–
–
–
–

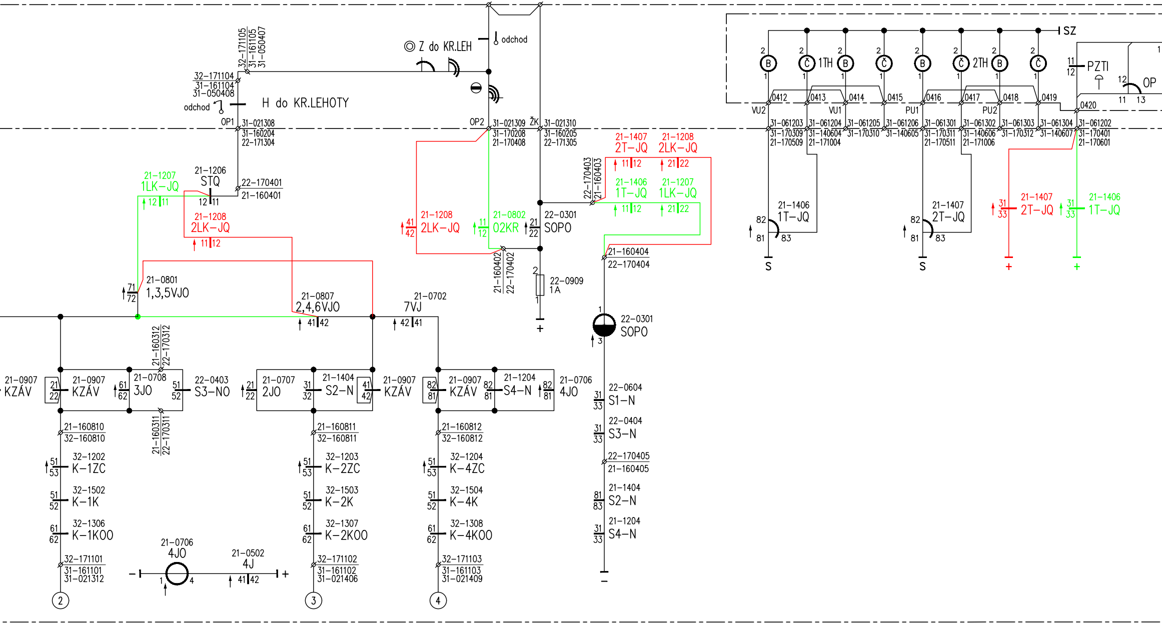
32–171105
31–161105
31–050407
Z do KR.LEH
odchod
32–171104
31–161104
31–050408
odchod
H do KR.LEHOTY
OP1
31–021308
31–160204
22–171304
OP2
31–021309
31–170208
21–170408
ŽK
31–021310
31–160205
22–171305
21–1207
1LK–JQ
12 11
21–1206
STQ
12 11
22–170401
21–160401
21–1208
2LK–JQ
11 12
21–1208
2LK–JQ
41 42
21–0802
02KR
11 12
21–0301
SOPO
21 22
22–0301
SOPO
22–170403
21–160403
21–1407
2T–JQ
11 12
21–1208
2LK–JQ
21 22
21–1406
1T–JQ
11 12
21–1207
1LK–JQ
21 22
21–160404
22–170404
21–160402
22–170402
22–0909
1A
21–0801
1,3,5VJO
71 72
21–0807
2,4,6VJO
41 42
21–0702
7VJ
42 41
22–0301
SOPO
21–160312
22–170312
21–0907
KZÁV
21 22
21–0907
KZÁV
61 62
21–0708
3JO
51 52
22–0403
S3–NO
21 22
21–0707
2JO
31 32
21–1404
S2–N
41 42
21–0907
KZÁV
82 81
21–0907
KZÁV
82 81
21–1204
S4–N
82 81
21–0706
4JO
21–160311
22–170311
21–160810
32–160810
32–1202
K–1ZC
51 53
32–1502
K–1K
51 52
32–1306
K–1KOO
61 62
32–171101
31–161101
31–021312
21–0706
4JO
21–0502
4J
41 42
21–160811
32–160811
32–1203
K–2ZC
51 53
32–1503
K–2K
51 52
32–1307
K–2KOO
61 62
32–171102
31–161102
31–021406
21–160812
32–160812
32–1204
K–4ZC
51 53
32–1504
K–4K
51 52
32–1308
K–4KOO
61 62
32–171103
31–161103
31–021409
22–0604
S1–N
31 33
22–0404
S3–N
31 33
22–170405
21–160405
21–1404
S2–N
81 83
21–1204
S4–N
31 33
2
3
4
SZ
B
Č
1TH
B
Č
B
Č
2TH
B
Č
PZTI
11 12
OP
12 11 13
VU2
0412
0413
VU1
0414
0415
PU1
0416
0417
PU2
0418
0419
0420
31–061203
31–170309
21–170509
31–061204
31–140604
21–171004
31–061205
31–170310
31–061206
31–140605
31–061301
31–170311
21–170511
31–061302
31–140606
21–171006
31–061303
31–170312
31–061304
31–140607
31–061202
31–170401
21–170601
21–1406
1T–JQ
82 81 83
S
21–1407
2T–JQ
82 81 83
S
21–1407
2T–JQ
31 33
+
21–1406
1T–JQ
31 33
+

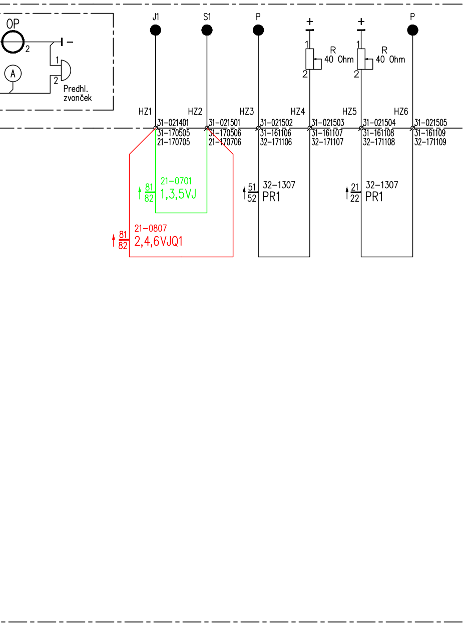

OP
2
1
2
A
Predhl.
zvonček
J1
S1
P
+
+
P
1
2
R
40 Ohm
1
2
R
40 Ohm
HZ1
HZ2
HZ3
HZ4
HZ5
HZ6
31–021401
31–170505
21–170705
31–021501
31–170506
21–170706
31–021502
31–161106
32–171106
31–021503
31–161107
32–171107
31–021504
31–161108
32–171108
31–021505
31–161109
32–171109
81
82
21–0701
1,3,5VJ
51
52
32–1307
PR1
21
22
32–1307
PR1
81
82
21–0807
2,4,6VJQ1

POZNÁMKA:

🟥 - nové prvky a spoje

🟩 - rušené prvky a spoje

PS,SO:	PS 408-21-04 Žst. Liptovský Hrádok, zabezpečenie st. postupov	4.9
Príloha:	Úprava principiálnej schémy St.1 - SP2	